Energizer

MEGA-PILES

https://www.mega-piles.com/

D

ENERGIZER E95



General Information

Classification:	Alkaline
Chemical System:	Zinc-Manganese Dioxide (Zn/MnO_2)
	No added mercury or cadmium
Designation:	ANSI-13A, IEC-LR20
Nominal Voltage:	1.5 volts
Operating Temp:	-18°C to 55°C (0°F to 130°F)
Typical Weight:	139 grams
Typical Volume:	56 cubic centimeters
Shelf Life:	10 years at 21°C
Terminal:	Flat Contact

Industry Standard Dimensions

mm (inches)

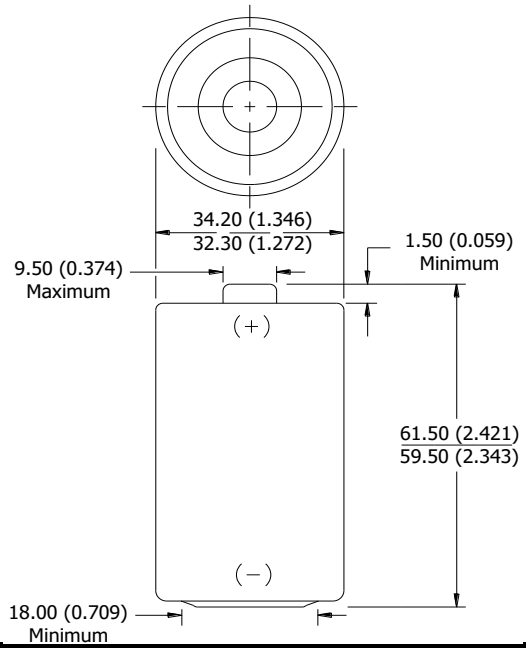

Milliamp-Hours Capacity

Continuous discharge to 0.8 volts at 21°C

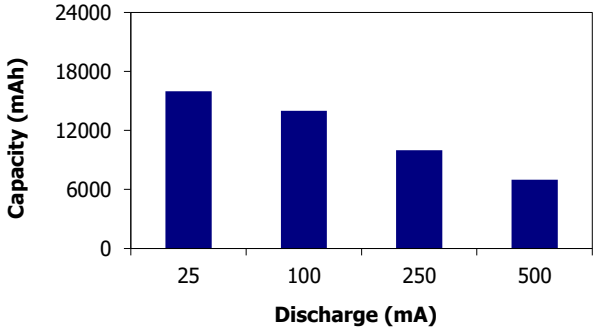

Industry Standard Tests (21°C)

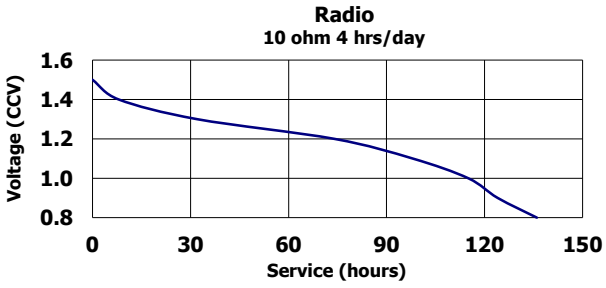

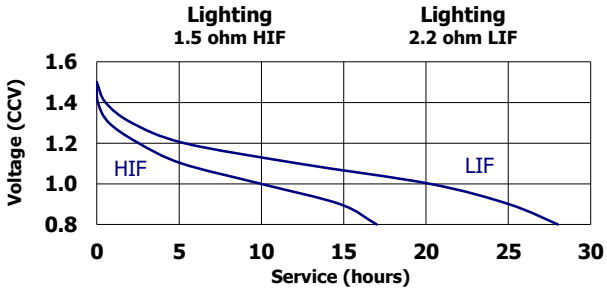

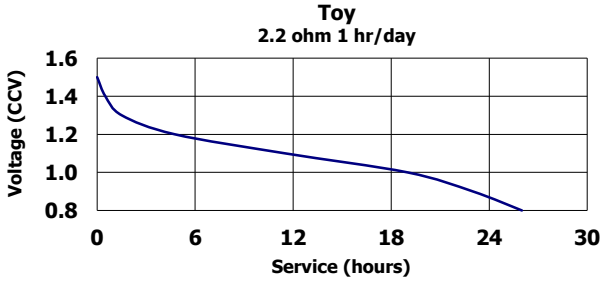

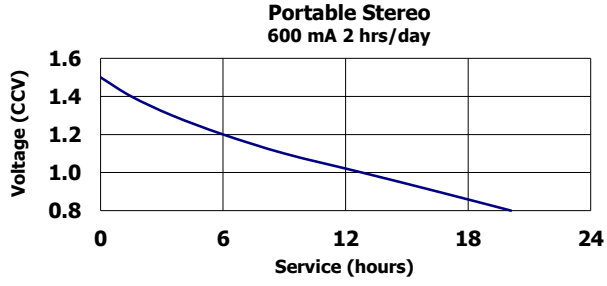

Important Notice

This datasheet contains typical information specific to products manufactured at the time of its publication.
Contents herein do not constitute a warranty and are for reference only.