MEGA-PILES
https://www.mega-piles.com/

DURACELL®

D395/D399

Zinc/Monovalent Silver Oxide Watch Battery

0% Mercury

Zn/Ag_2O

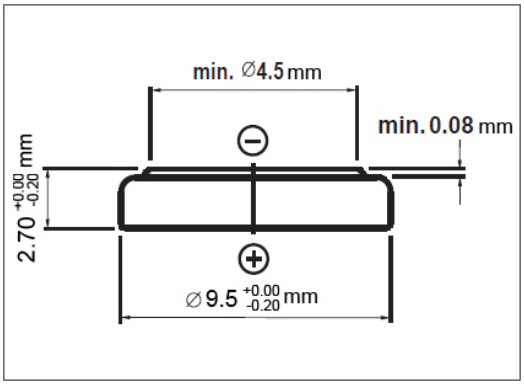

Specifications

Classification:	Silver
Chemical System:	Zinc/Monovalent Silver Oxide (Zn/Ag_2O)
Designation:	ANSI-1162SO/1165SO, IEC-SR57
Nominal Voltage:	1.55V
Self Discharge:	Less than 10% per year at 20°C
Operating Temp:	0°C - 60°C
Typical Weight:	~0.76 g
Capacity:	*55 mAh, Discharge over 22 kΩ at 20°C to 1.2V

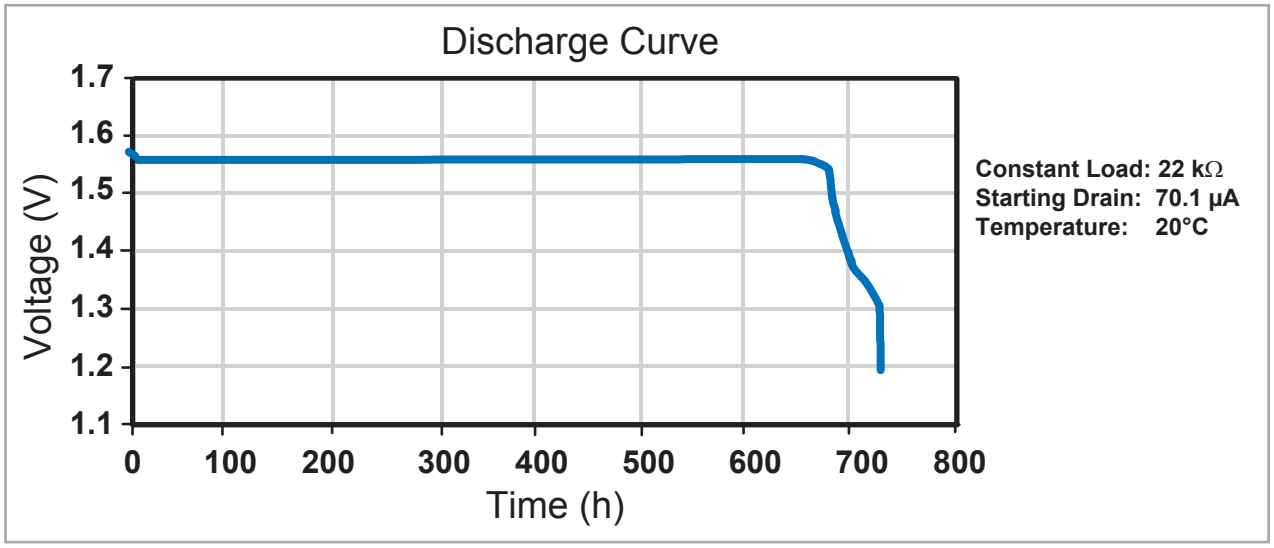

DURACELL®
BATTERIES

Berkshire Corporate Park
Bethel, CT 06801 U.S.A.
Telephone: Toll free 1.800.544.5454
Internet: www.duracell.com

***Delivered capacity is dependent on the applied load, intermittent usage, operating temperature and cut off voltage. Please refer to the charts and discharge data for examples of energy/service life that the battery will provide for various conditions.**

Information and contents in this data sheet are for reference purposes only. They do not constitute any warranty and representation is subject to change without notice. For most current information and further details, please contact Duracell.